Current part is item (13) on diagram. Available at www.oshkoshequipment.com

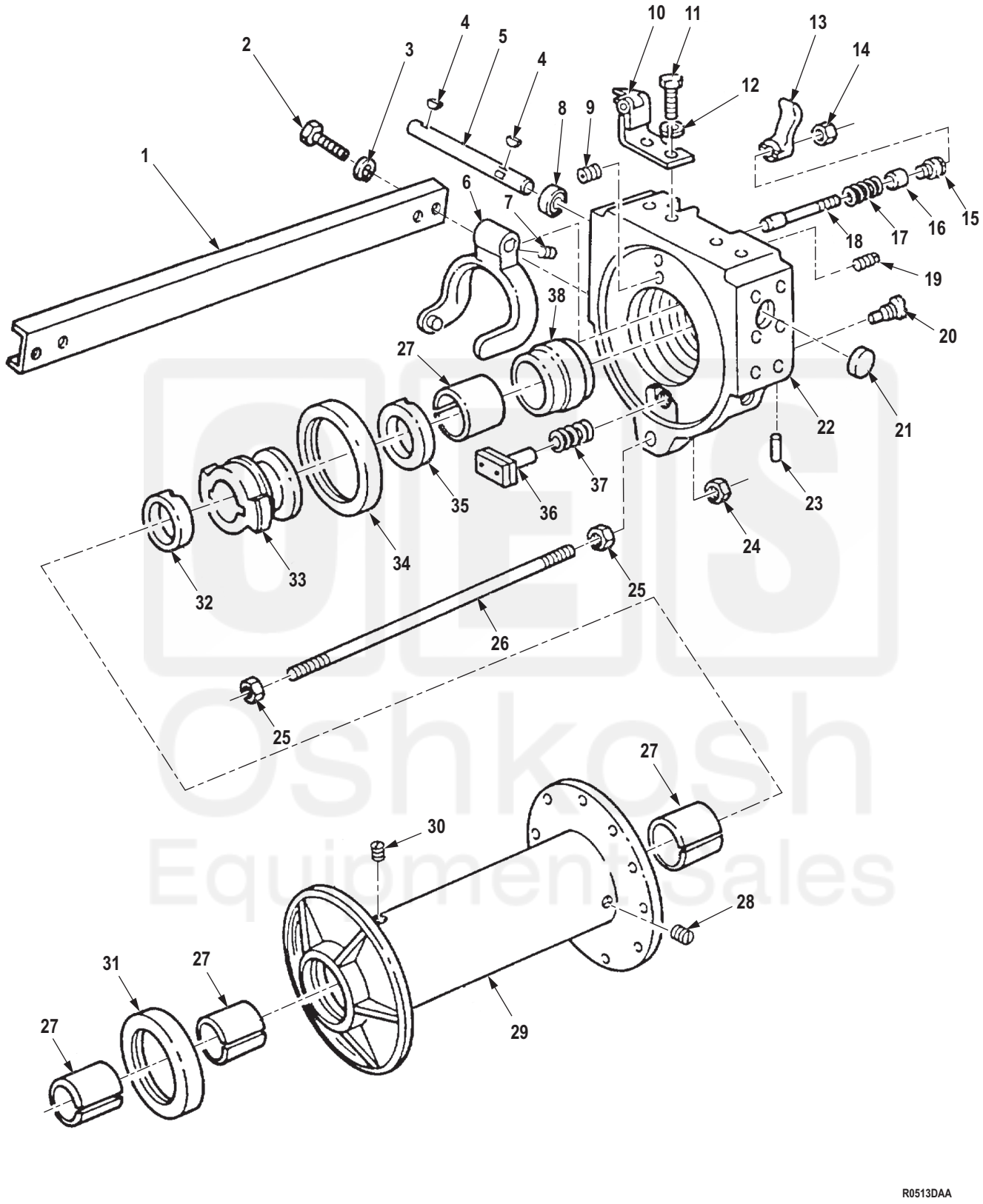

Figure 496. Front Winch Basic, Drum and Related Parts.

Current part is item (13) on diagram. Available at www.oshkoshequipment.com

Current part is item (13) on diagram. Available at www.oshkoshequipment.com

(1) ITEM NO.	(2) SMR CODE	(3) NSN	(4) CAGEC	(5) PART NUMBER	(6) DESCRIPTION AND USABLE ON CODE (UOC)	(7) QTY
					GROUP 2001 HOIST, CAPSTAN, WINDLASS, CRANE OR WINCH ASSEMBLY.	
					FIG. 496. FRONT WINCH BASIC, DRUM AND RELATED PARTS.	
1	PFHZZ	9520-00-740-9812	61465	305356	CHANNEL,STRUCTURAL UOC: DAD,DAF,DAH,DAL,DAX,V14, V16,V18,V19,V21,ZAB,ZAD,ZAF,ZAH,ZAL	1
2	PAHZZ	5305-00-900-1118	80204	B1821BH075C150N	SCREW,CAP,HEXAGON H UOC: DAD,DAF,DAH,DAL,DAX,V14, V16,V18,V19,V21,ZAB,ZAD,ZAF,ZAH,ZAL	4
3	PAHZZ	5310-00-584-7888	R1120	204392-212	WASHER,LOCK UOC: DAD,DAF,DAH,DAL,DAX,V14, V16,V18,V19,V21,ZAB,ZAD,ZAF,ZAH,ZAL	4
4	PAHZZ	5315-00-616-5519	80205	MS35756-13	KEY,WOODRUFF UOC: DAD,DAF,DAH,DAL,DAX,V14, V16,V18,V19,V21,ZAB,ZAD,ZAF,ZAH,ZAL	2
5	PAHZZ	3040-00-745-7685	19207	7017190	SHAFT,STRAIGHT UOC: DAD,DAF,DAH,DAL,DAX,V14, V16,V18,V19,V21,ZAB,ZAD,ZAF,ZAH,ZAL	1
6	PAHZZ	2520-00-860-7340	19207	7017195	SHIFTER FORK,VEHICU UOC: DAD,DAF,DAH,DAL,DAX,V14, V16,V18,V19,V21,ZAB,ZAD,ZAF,ZAH,ZAL	1
7	PAHZZ	5305-00-058-9378	80205	MS51977-50	SETSCREW UOC: DAD,DAF,DAH,DAL,DAX,V14, V16,V18,V19,V21,ZAB,ZAD,ZAF,ZAH,ZAL	1
8	PAHZZ	5330-00-866-6236	19207	7418774	SEAL,PLAIN ENCASED UOC: DAD,DAF,DAH,DAL,DAX,V14, V16,V18,V19,V21,ZAB,ZAD,ZAF,ZAH,ZAL	1
9	PAHZZ	4730-00-954-1281	58536	AA59616ACABCB	PLUG,PIPE UOC: DAD,DAF,DAH,DAL,DAX,V14, V16,V18,V19,V21,ZAB,ZAD,ZAF,ZAH,ZAL	1
10	PAHZZ	5340-00-040-2331	19207	8331202	HINGE,BUTT UOC: DAD,DAF,DAH,DAL,DAX,V14, V16,V18,V19,V21,ZAB,ZAD,ZAF,ZAH,ZAL	1
11	PAHZZ	5305-00-724-5910	44218	S7-51	SCREW,CAP,HEXAGON H UOC: DAD,DAF,DAH,DAL,DAX,V14, V16,V18,V19,V21,ZAB,ZAD,ZAF,ZAH,ZAL	2
12	PAHZZ	5310-00-820-6653	80205	MS35338-50	WASHER,LOCK UOC: DAD,DAF,DAH,DAL,DAX,V14, V16,V18,V19,V21,ZAB,ZAD,ZAF,ZAH,ZAL	2
13	PAHZZ	2540-00-740-9150	61465	7409150	LATCH,DRUM LOCK UOC: DAD,DAF,DAH,DAL,DAX,V14, V16,V18,V19,V21,ZAB,ZAD,ZAF,ZAH,ZAL	1
14	PAHZZ	5310-00-880-7744	96906	MS51967-5	NUT,PLAIN,HEXAGON UOC: DAD,DAF,DAH,DAL,DAX,V14, V16,V18,V19,V21,ZAB,ZAD,ZAF,ZAH,ZAL	1

Current part is item (13) on diagram. Available at www.oshkoshequipment.com